SONY

4-154-345-**31** (1)

Color Video Camera
彩色摄像机

Operating Instructions

Before operating the unit, please read this manual thoroughly and retain it for future reference.

使用手册

使用本机前，请仔细阅读本使用手册并妥善保存以备日后参考。

DynaView EX

SSC-G923/G913
SSC-G928/G918

© 2009 Sony Corporation Printed in China http://www.sony.net/

WARNING

To reduce a risk of fire or electric shock, do not expose this product to rain or moisture.

To avoid electrical shock, do not open the cabinet. Refer servicing to qualified personnel only.

The apparatus shall not be exposed to dripping or splashing and no objects filled with liquid, such as vases, shall be placed on the apparatus.

WARNING (SSC-G928/G918 only)

The mains plug must be used to disconnect mains power. Please ensure that the socket outlet is installed near the equipment and shall be easily accessible.

WARNING

This unit has no power switch.
When installing the unit, incorporate a readily accessible disconnect device in the fixed wiring. If a fault should occur during operation of the unit, operate the disconnect device to switch the power supply off.

For the customers in Europe

The manufacturer of this product is Sony Corporation, 1-7-1 Konan, Minatoku, Tokyo, Japan.
The Authorized Representative for EMC and product safety is Sony Deutschland GmbH, Hedelfinger Strasse 61, 70327 Stuttgart, Germany.
For any service or guarantee matters please refer to the addresses given in separate service or guarantee documents.

For the customers in Europe, Australia and New Zealand

WARNING

This is a Class A product. In a domestic environment, this product may cause radio interference in which case the user may be required to take adequate measures.
In the case that interference should occur, consult your nearest authorized Sony Service facility.

This apparatus shall not be used in the residential area.

WARNING

This installation should be made by a qualified service person and should conform to all local codes.

ATTENTION

The electromagnetic fields at the specific frequencies may influence the picture of this unit.

IMPORTANT

The nameplate is located on the top.

A

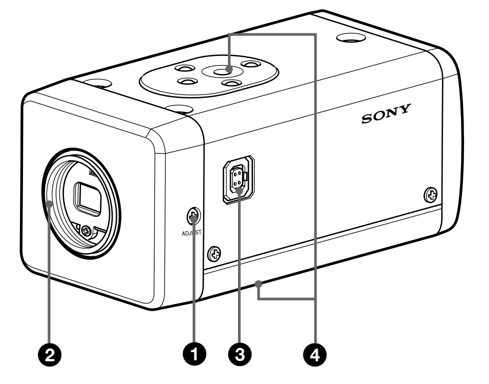

B

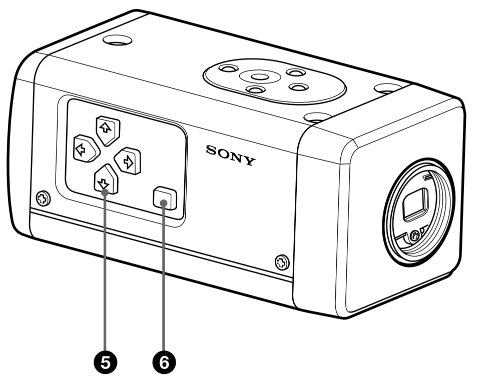

C

SSC-G928/G918 SSC-G923/G913

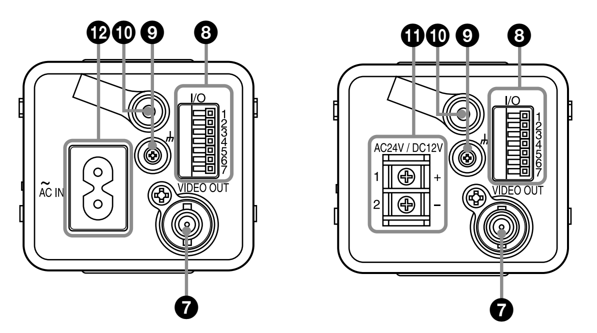

D

E

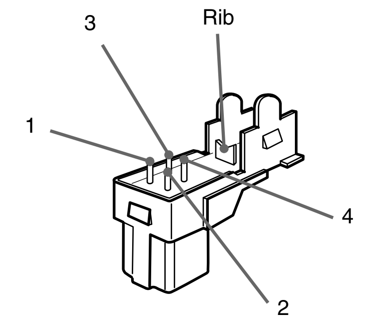

Lens Connector (not supplied)

[English]

Rib (If the cable is thick, cut this off.)		
Pin 4	DC control	Drive – (Ground)
Pin 2	DC control	Control +
Pin 1	DC control	Control –
Pin 3	DC control	Drive +

F

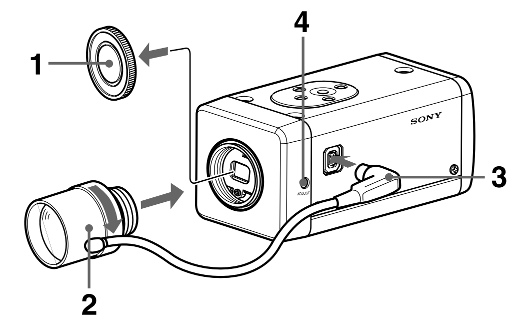

G

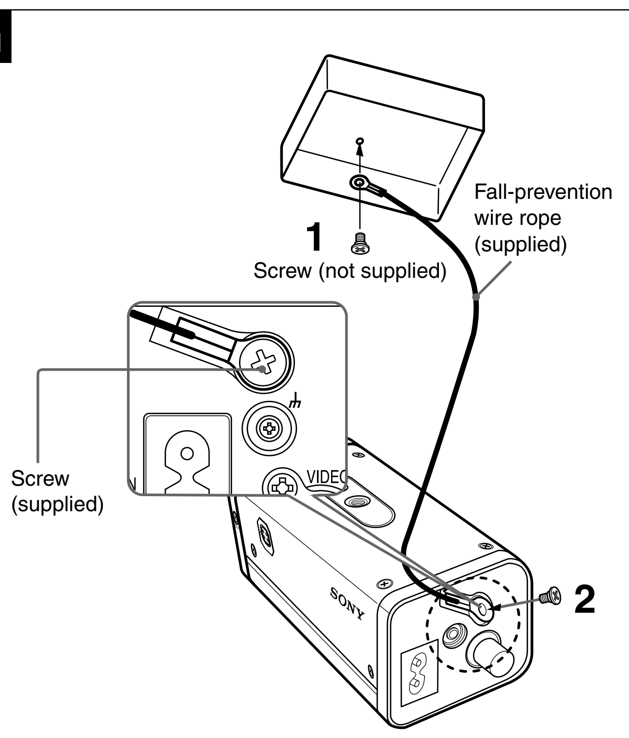

H

SSC-G928/G918

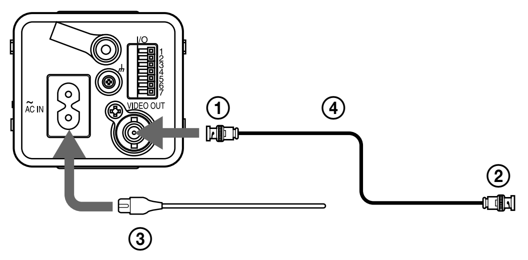

SSC-G923/G913

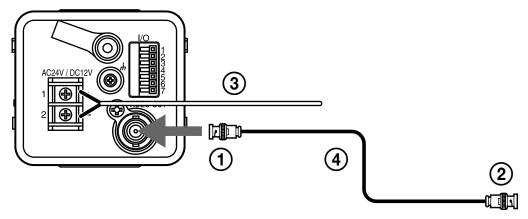

English

Features

The SSC-G923/G928 color video camera is equipped with a 1/3 inch Super HAD CCD II™ SSC-G913/G918 color video camera is equipped with a 1/3 inch Super HAD CCD* and also has the following features:

- High resolution
- Wide dynamic range using DynaView EX** technology
- High sensitivity
- Noise Reduction
- Alarm output using the Motion Detection Function or Face Detection function
- Day/Night function allowing color/monochrome mode switching
- CCD-IRIS*** function
- Automatic white balance tracking and adjustment (ATW/ATW-PRO)
- DC controlled auto-iris lens capability.
- Video controlled auto-iris lens capability. (For the SSC-G923/G928)
- Backlight compensation through center measurement
- Line lock function for synchronizing through AC power source
- Easy setup using on-screen menu by English and Chinese language

* Super HAD CCD II™ and Super HAD CCD* are trademarks of Sony Corporation.
** DynaView EX™ is a registered trademark of Sony Corporation.
*** CCD-IRIS™ is a trademark of Sony Corporation.

Notes on Use

Power supply

- The SSC-G923/G913 operates on either AC 24V (50 Hz) or DC 12 V power. The SSC-G923/G913 automatically detects the power.
  – When connecting the transformer, be sure to connect each lead to the appropriate terminal. Wrong connection may cause malfunction and/or damage to the video camera.
  – Ground the unit or an irregular voltage may be generated in the AC power cord and may cause malfunction and/or damage to the video camera.
- The SSC-G928/G918 must always be operated with an AC 220 - 240 V (50 Hz) power supply.

Handing of the unit

Be careful not to spill water or other liquids on the unit, or allow combustible or metallic objects to fall inside the body. If used with a foreign object inside, the camera is liable to fail, or be a cause of fire or electric shock.

Operation and storage locations

Avoid aiming the camera at very bright objects such as the sun or electric lights for an extended period. Avoid operating or storing the unit in the following locations.

- Extremely hot or cold places (operating temperature –10 °C to + 50 °C (14 °F to 122 °F)) We recommend that the unit be used within a temperature range of 0 °C to 35 °C (32 °F to 95 °F)
- Damp or dusty places
- Where it is exposed to rain
- Where it is subject to strong vibration and shock
- Close to generators of powerful electromagnetic radiation such as radio or TV transmitters.
- Where it is subject to fluorescent light reflections
- Where it is subject to unstable (flickering, etc.) lighting conditions.
- Where it is subject to moisture.
- Where it is subject to fume and swear.

Care of the unit

- Remove dust or dirt on the surface of the lens or CCD with a blower.
- Use a dry, soft cloth to clean the body. If it is very dirty, use a cloth dampened with a small quantity of neutral detergent, then wipe dry.
- Avoid using volatile solvents such as thinners, alcohol, benzene, and insecticides. They may damage the surface finish and/or impair the operation of the camera.

Other

- When the BLC menu is set to an option other than OFF, "hunting" may occur, that is, the image may get darker and lighter as the camera "hunts" for the optimum exposure level. If hunting occurs, set the BLC menu to OFF.
- If you use the CCD-IRIS function in locations where the camera is exposed to fluorescent light, a slow color change may occur.
- The focus may be less sharp under near infrared light than under visible light.
- The best camera performance may not be obtained under near infrared light due to the lens coating.

In the event of any problems with the operation of the camera, contact your Sony dealer.

Note on laser beams

Laser beams may damage the CCDs. If you shoot a scene that includes a laser beam, be careful not to let a laser beam become directed into the lens of the camera.

Location and Function of Part

Top/Front/Right Side — Illustration A

❶ Focal length adjustment
Use this screw to adjust the focal length (the distance between the lens mounting plane and the image plane).

❷ Lens mount
Use to mount an appropriate CS-mount lens.

❸ Lens connector (4-pin socket)
Supplies power and control signals to an auto-iris lens (not supplied).

❹ Tripod screws
The screw holes for attaching the tripod are located on both the top and bottom of the camera. Use a 1/4" 20 UNC screw to attach a tripod to the camera.
The tripod must be set up on a flat surface and tightened firmly by hand.

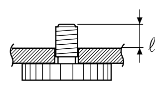

1/4", 20 UNC
ℓ = 4.5 mm – 7 mm
(ISO standard) (with the screws fastened)

Caution

Use the mounting screw whose length is 4.5 mm – 7 mm only. Use of other screws may cause improper mounting and damage parts inside the camera.

Left Side — B

❺ ↑/↓/←/→ buttons
Use these buttons for menu operation. The ↑ and ↓ buttons move the cursor upward and downward. The ← and → buttons change the setting.
For details of the use, see the supplied "Menu Operations" manual.

❻ MENU/ENTER button
Use for menu operation. Press this button to display the menu or confirm the settings.
For details of the use, see the supplied "Menu Operations" manual.

Rear — C

❼ VIDEO OUT (composite video signal output) connector (BNC type)

❽ I/O port

Pin No.	Signal	Description
1	REMOTE +	for future system expansion using an RS-485 connection
2	REMOTE –	for future system expansion using an RS-485 connection
3	ALARM OUT	Outputs 5 V potential When Motion Detection (MD) or Face Detection (FD) is enabled and triggered while outputs 0 V normally.
4	COM	common to pins No. 3, 5 and 7
5	EXTERNAL CTRL OUT	H (+5 V) is output between this terminal and COM when the color mode is selected; L (0 V) is output when the B&W mode is selected.
6	COM	common to pins No. 3, 5 and 7
7	EXTERNAL CTRL IN	When H (+5 V) is applied between this terminal and COM, the color mode is selected; when L (0 V) is applied, B&W mode is selected.

❾ ⏚ Ground terminal (screw type)
If there are noises in the connections, connect this terminal to the ground.

❿ Fall-prevention wire rope mounting screw hole
When installing the camera to a ceiling or wall, secure the supplied fall-prevention wire rope to this hole using the supplied screw.

⓫ DC 12 V/AC 24 V (50 Hz) (power input) terminal (DC 12 V ±10% /AC 24 V ±10%) (SSC-G923/G913)

⓬ Power inlet (AC 220 - 240 V, 50 Hz) (SSC-G928/G918)

Installation

WARNING

- If you attach the camera in the height such as the wall or the ceiling, etc., entrust the installation to an experienced contractor or installer.
- If you install the camera on the ceiling, ensure that the ceiling is strong enough to withstand the weight (20 Kg) of the camera plus the bracket and then install the camera securely. If the ceiling is not strong enough, the camera may fall and cause serious injury.
- To prevent the camera from falling, make sure to attach the supplied wire rope.
- If you attach the camera to the ceiling, check periodically, at least once a year, to ensure that the connection has not loosened. If conditions warrant, make this periodic check more frequently.

Suitable lens — D

The lens must be a CS-mount type of less than 1 kg. The protrusion behind the mounting surface must be 4 mm or less.

Installation of an Auto Iris Lens Connector — E

Install the lens connector (not supplied) when using an Auto Iris Lens.
This installation should be done only by qualified service personnel or system installers. A lens connector is not included with this camera package.

1. Cut the iris control cable at the edge of the lens connector to remove the existing lens connector and then remove the outer cable cover as shown in the diagram on the left.
2. Solder the lens cable to the pins of the lens connector.

Fitting the lens — F

1. Unscrew the lens mount cap.
2. Screw in the lens, and turn it until it is secured.
3. Insert the lens plug into the LENS connector.
   When fitting a manual-iris lens, omit step 3.
4. According to the type of lens, adjust the focal length by turning the focal length adjustment screw.

Caution

- Keep the lens mount cap on the camera when it is not attached the lens.
- **Check the lens mount**
  Check the lens mount at least once a year to ensure it has not become loose. If conditions warrant, make this periodic check more frequently.

Installing the camera

ATTENTION

If installing the camera on the ceiling, be sure it is secure. If not securely installed, the camera may fall and injury may occur.
If the camera is installed on the ceiling using equipment such as a bracket, housing and motored swivel base (pan/tilt), do the following:

- Use tripod screws and securely tighten them with a driver. Order the tripod screws (Sony Part No. 3-174-693-02) from your nearest Sony dealer.
- Install the tripod adapter on a flat surface.

Attaching the fall-prevention wire rope — G

When you install the camera on a ceiling or a high position, be sure to attach the supplied fall-prevention wire rope to prevent the camera from falling.
Attach the fall-prevention wire rope to the screw hole on the rear of the camera, as in the illustration.

Note

Take care not to short-circuit the power terminal or the cable with the wire rope when you attach it.

1. Secure the wire rope to the junction box on the ceiling.
   Use a screw to match the screw hole of your junction box (not supplied).
2. Secure the wire rope to the wire rope mounting screw hole on the rear of the camera using the supplied screw.

Caution

Use the supplied screws for installation. If not, the wire rope may not function properly.

Connecting the Camera — H

❶ Connect the video cable to the VIDEO OUT connector.
❷ Connect the video cable to the VIDEO IN connector of a video monitor, etc.
❸ Connect to the appropriate power source using a power cord.
SSC-G928/G918: to AC 220 - 240 V (50 Hz) power source
SSC-G923/G913: to a DC 12 V, or an AC 24V (50 Hz) power source
❹ 75-ohm coaxial cable.

Notes

- Be sure to input only the proper voltage to the power terminal of the camera.
- Be sure to push the power cord all the way in.

Phase Adjustment

If the picture may roll vertically, adjust the vertical phase using V PHASE in the SYNC menu.
For operating the menu, see the supplied "Menu Operations" manual.

Phenomena Specific to CCD Image Sensors

The following phenomena that may appear in images are specific to CCD (Charge Coupled Device) image sensors. They do not indicate malfunctions.

White flecks

Although the CCD image sensors are produced with high-precision technologies, fine white flecks may be generated on the screen in rare cases, caused by cosmic rays, etc.
This is related to the principle of CCD image sensors and is not a malfunction.
The white flecks especially tend to be seen in the following cases:
- when operating at a high environmental temperature
- when you have raised the gain (sensitivity)
- when using the slow shutter

Vertical smear

When an extremely bright object, such as a strong spotlight or flashlight, is being shot, vertical tails may be produced on the screen, or the image may be distorted.

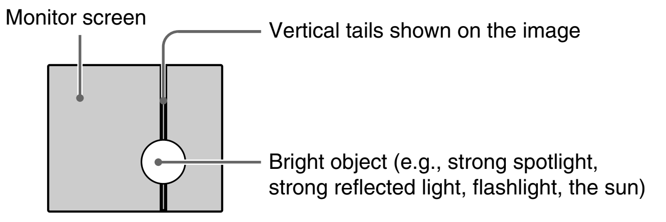

Aliasing

When fine patterns, stripes, or lines are shot, they may appear jagged or flicker.

Specifications

Image device	1/3 inch interline transfer CCD
Effective picture elements	SSC-G923/G928: 976 (horizontal) × 582 (vertical) SSC-G913/G918: 752 (horizontal) × 582 (vertical)
Lens mount	CS-mount
Signal system	PAL color system
Synchronization system	internal/line lock
Horizontal resolution	SSC-G923/G928: 650 lines (sharp mode) SSC-G913/G918: 540 lines (sharp mode)
Minimum illumination	SSC-G923/G928: Color: 0.22 lx at F1.2 (50 IRE, AGC ON, Turbo mode) 0.11 lx at F1.2 (30 IRE, AGC ON, Turbo mode) B/W: 0.06 Lx at F1.2 (50 IRE, AGC ON, Turbo mode) 0.03 lx at F1.2 (30 IRE, AGC ON, Turbo mode) SSC-G913/G918: Color: 0.6lx at F1.2 (50 IRE, AGC ON, Turbo mode) 0.3 lx at F1.2 (30 IRE, AGC ON, Turbo mode) B/W: 0.06 Lx at F1.2 (50 IRE, AGC ON, Turbo mode) 0.03 lx at F1.2 (30 IRE, AGC ON, Turbo mode)
Video output	1 Vp-p, 75 ohms, negative sync
Video S/N	50 dB (AGC OFF, WEIGHT ON)
Dynamic range	75 dB typical
Electronic shutter	1/50, 1/120, 1/250, 1/500, 1/1000, 1/2000, 1/4000, 1/10000, 1/20000, 1/40000, 1/80000, 1/100000 (sec)
White balance	ATW-PRO/ATW/3200K/5600K/MANUAL/DUAL WB
Automatic gain control (AGC)	OFF/NORMAL/TURBO/MANUAL
Power requirements	SSC-G923/G913: AC 24 V (50 Hz) / DC 12 V SSC-G928/G918: AC 220 - 240 V (50 Hz)
Power consumption	SSC-G923: 2.8 W SSC-G928: 3.5 W SSC-G913: 2.4 W SSC-G918: 2.8 W
Operating temperature	–10 °C to +50 °C (14 °F to 122 °F)
Operating humidity	20 to 80%
Storage temperature	–40 °C to +60 °C (–40 °F to 140 °F)
Storage humidity	20 to 95%
Mass	SSC-G923/G913: Approx. 400 g (0.88 lb 14 oz) SSC-G928/G918: Approx. 420 g (0.93 lb 15 oz)
Dimensions	63 × 57 × 124 mm (Projecting part not included) (w/h/d)
Supplied accessories	Lens mount cap (1) Power cable (1) (SSC-G918/G928 only) Menu operations (1) Operating Instructions (1) Fall-prevention wire rope (1) Screw ⊕ M4 × 8 (1)

Design and specifications are subject to change without notice.

Note

Always verify that the unit is operating properly before use. SONY WILL NOT BE LIABLE FOR DAMAGES OF ANY KIND INCLUDING, BUT NOT LIMITED TO, COMPENSATION OR REIMBURSEMENT ON ACCOUNT OF THE LOSS OF PRESENT OR PROSPECTIVE PROFITS DUE TO FAILURE OF THIS UNIT, EITHER DURING THE WARRANTY PERIOD OR AFTER EXPIRATION OF THE WARRANTY, OR FOR ANY OTHER REASON WHATSOEVER.

Regular parts replacement

Some of the parts that make up this product (electrolytic condenser, for example) need replacing regularly depending on their life expectancies. The lives of parts differ according to the environment or condition in which this product is used and the length of time it is used, so we recommend regular checks.
Consult the dealer from whom you bought it for details.

警告

为减少火灾或电击危险，请勿让本产品受到雨淋或受潮。

为了避免触电，切勿打开机壳。只能请专业维修人员进行维修。

设备不要受到滴水或水溅，不要将盛满液体的花瓶等物品放在设备上。

警告（仅限 SSC-G928/G918）

必须使用电源插头断开电源连接。请确保电源插座安装在设备旁，并要便于插拔。

警告

本机无电源开关。
在安装本机时，要在固定布线中配置一个易于使用的断电设备。在本机运行时如果发生故障，可以操作断电设备以断开本机电源。

声明

此为 A 级产品，在生活环境中，该产品可能会造成无线电干扰。
在这种情况下，可能需要用户对其干扰采取切实可行的措施。
一旦发生干扰，请联络附近的授权 Sony 维修机构。

本设备不应在住宅区使用。

本产品制造商为 Sony Corporation，1-7-1 Konan，Minatoku，Tokyo，Japan。
任何维修或质保事务请联络单独的维修或质保文件中提供的地址。

警告

此项安装应由专业服务人员进行，并遵照所有本地法规。

注意

特定频率的电磁场可能会干扰本机的图像。

重要

设备铭牌位于顶部。

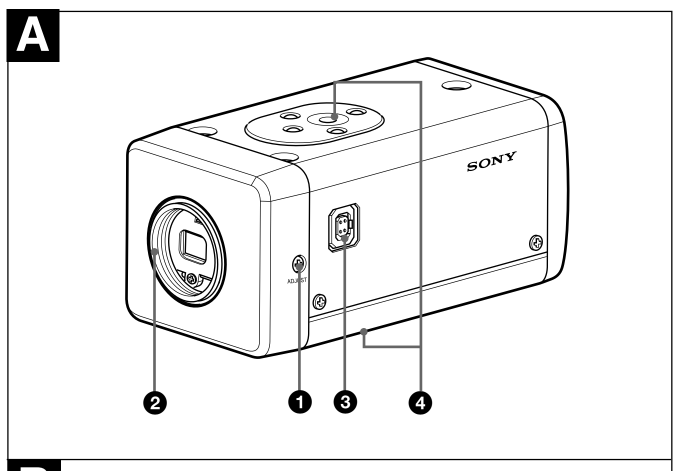

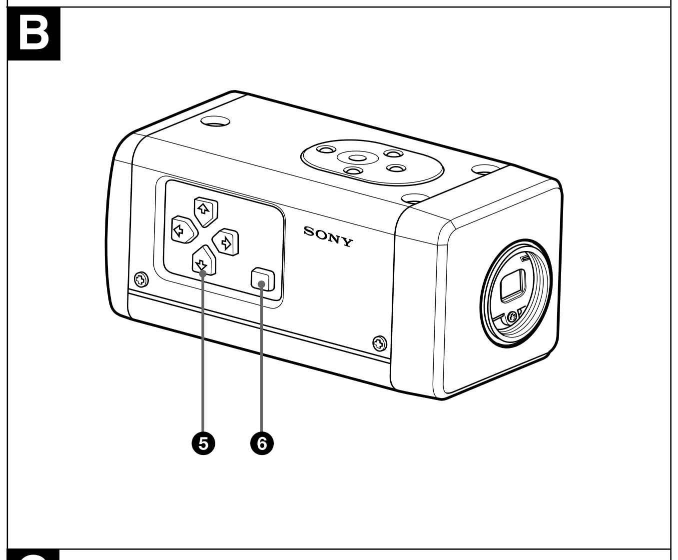

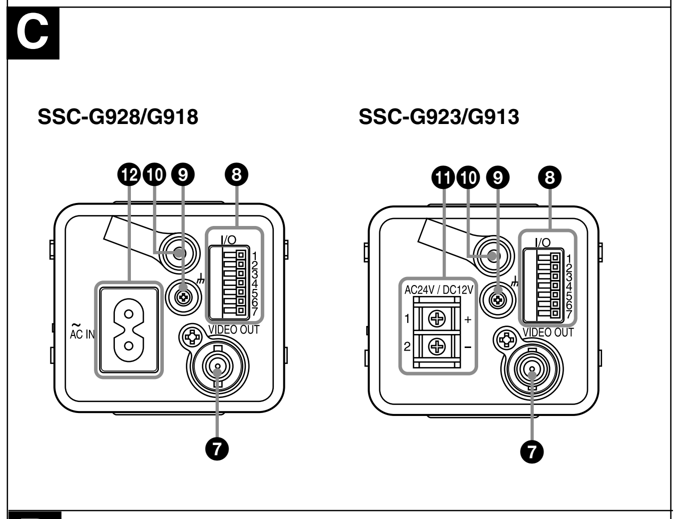

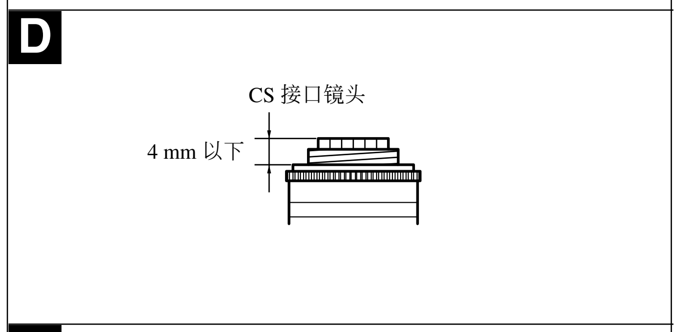

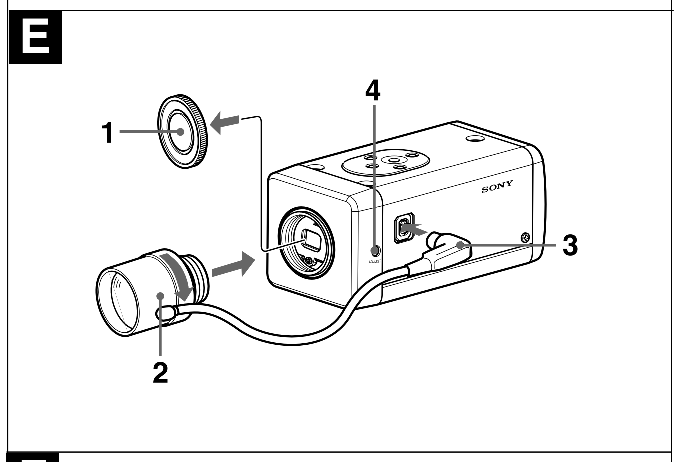

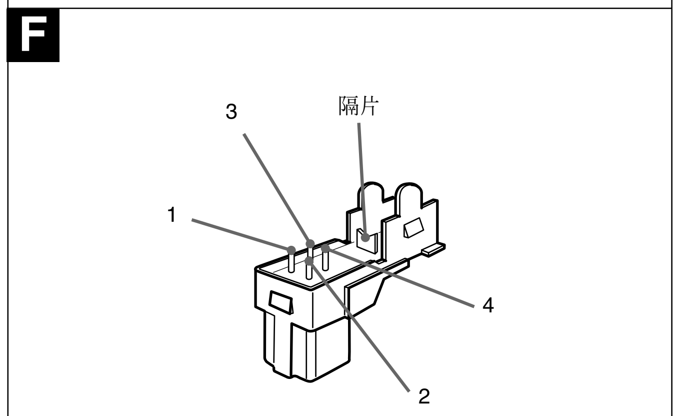

镜头插头（不提供）

［中文］

隔片（如果电缆太粗，则将此隔片切除。）		
4 号脚	直流控制	驱动 –（接地）
2 号脚	直流控制	控制 +
1 号脚	直流控制	控制 –
3 号脚	直流控制	驱动 +

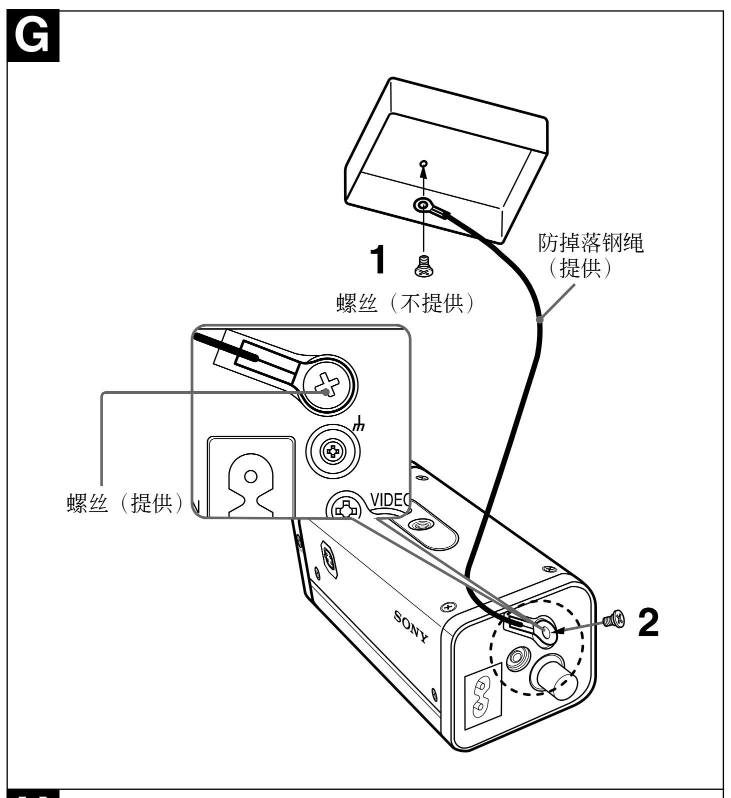

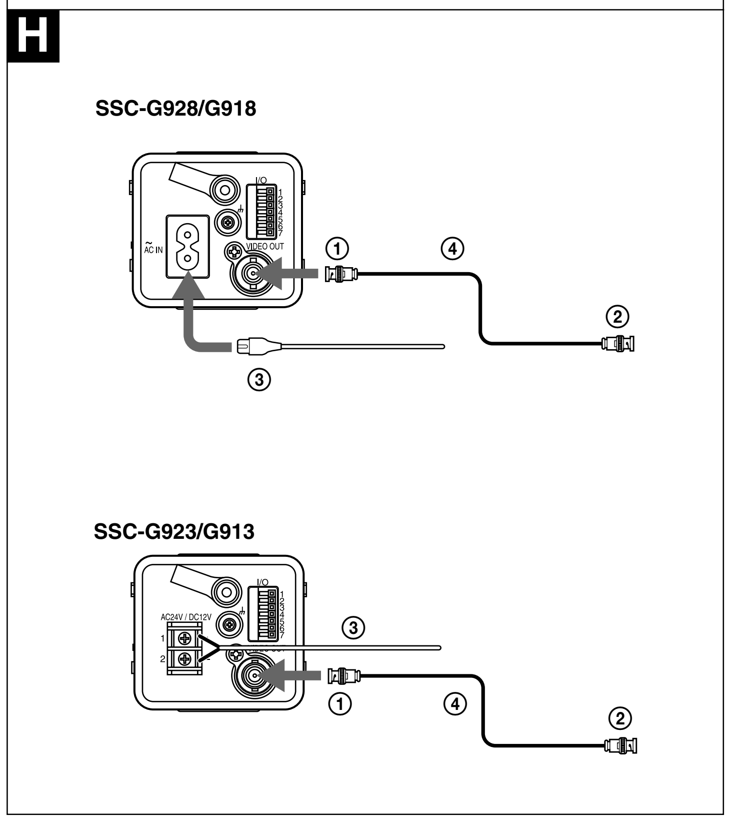

特点

此 SSC-G923/G928 彩色摄像机配备有 1/3 英寸 Super HAD CCD II™，SSC-G913/G918 彩色摄像机配备有 1/3 英寸 Super HAD CCD* 并具有以下特点：

- 高分辨率
- 采用 DynaView EX** 技术的宽动态范围
- 高灵敏度
- 降噪功能
- 使用动态检知功能或人脸识别功能进行报警输出
- 切换彩色／黑白模式的白天／夜间功能
- CCD-IRIS*** 功能
- 自动白平衡寻迹和调节（ATW/ATW-PRO）
- 与 DC 控制型自动光圈镜头兼容。
- 与视频信号控制型自动光圈镜头兼容（仅适用于 SSC-G923/G928）。
- 中央测光的逆光补偿
- 交流电源同步的线路锁定功能
- 利用画面菜单简易地进行设定中／英文

* Super HAD CCD II™ 和 Super HAD CCD* 是 Sony 公司的商标。
** DynaView EX™ 是 Sony 公司的注册商标。
*** CCD-IRIS™ 是 Sony 公司的商标。

使用须知

电源

- SSC-G923/G913 必须使用 24 V (50 Hz) 交流电源或 12 V 直流电源。SSC-G923/G913 可自动检测电源。
  - 连接变压器时，请务必将各导线连接至适当的端子。错误的连接将导致摄像机发生故障和（或）损坏。
  - 请将装置接地，否则交流电源线可能会产生不规则的电压，从而可能会导致摄像机发生故障和（或）损坏。
- SSC-G928/G918 必须使用 220-240 V (50 Hz) 交流电源。

使用本机

请小心不要溅水或溅洒其他液体在本机上，或使易燃物或金属物掉入机内。若在异物进入机内的状态下使用本机，摄像机可能会发生故障或因此发生火灾或触电。

操作与存放场所

请避免长时间将摄像机对准强光物体（如阳光、照明光）。请避免在以下场所使用或存放本机。

- 极热或极冷（工作温度为－10℃～＋50℃）的地方，我们建议在 0℃ 至 35℃ 温度范围内使用本机
- 潮湿或多尘处
- 遭到雨淋的地方
- 受到强烈震动或撞击的地方
- 靠近强电磁辐射发射机（如无线电或电视信号发射机）的地方
- 易受到荧光灯照射的地方
- 照明条件不稳定（闪烁等）的地方
- 结露和高湿的环境
- 油烟或油污的环境

保养

- 用气刷清除镜头或 CCD 表面的灰尘或污垢。
- 使用干燥、柔软的布擦拭机体。如果是顽垢，可先用布蘸少许中性洗涤剂擦拭，然后用布擦干。
- 避免使用诸如稀释剂、酒精、苯和杀虫剂之类的挥发性溶剂进行清洁。否则会破坏摄像机的表面涂层和（或）削弱其工作性能。

其他

- 当 BLC 菜单处于“OFF”以外的其他位置时，可能出现“猎振”。这是因为摄像机“猎振”以设定最佳曝光等级而可能使图像变得忽明忽暗。遇此情况时，请将 BLC 菜单设定于“OFF”位置。
- 若在摄像机暴露于荧光灯光线的场所使用 CCD-IRIS 功能，可能会发生缓慢的色彩变化。
- 在近处的红外线条件下，聚焦可能不如在可见光条件下清晰。
- 因镜头涂层的原因，在近处的红外线条件下摄像机可能无法发挥其最佳性能。

有关在摄像机使用过程中出现的任何问题，请与您的 Sony 维修代理联系。

有关激光束的注意事项
激光束可能会损伤 CCD。如果拍摄包含激光束的场景，请注意不要让激光束直接射入摄像机镜头。

部件的位置和功能

顶部／前面／右侧　图 A

❶ 焦距调节
使用此螺丝调节焦距（镜头安装板和图像板之间的距离）。

❷ 镜头接口
用于安装适当的 CS 型接口镜头。

❸ 镜头插口（4 针插座）
为自动光圈镜头（不提供）提供电源和控制信号。

❹ 三脚架螺丝孔
摄像机的顶部和底部都有用于安装三脚架的螺丝孔。
使用 1/4" 20 UNC 螺丝将三脚架安装到摄像机上。
三脚架必须放置在平坦的表面上，并用手拧紧。

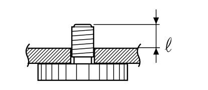

1/4"，20 UNC
ℓ = 4.5 mm – 7 mm
（ISO 标准）（用螺丝固定）

小心
只能使用长度为 4.5 mm – 7 mm 的安装螺丝。使用其它螺丝可能会造成不当安装，并可能损坏摄像机内部零件。

左侧　B

❺ ↑/↓/←/→ 键
使用这些键进行菜单操作。↑ 和 ↓ 键用于将光标上移和下移；← 和 → 键用于改变设定。
有关使用的详细说明，请参阅附带的“菜单操作”手册。

❻ MENU/ENTER 键
用于菜单操作。按此键显示菜单或确认设定。
有关使用的详细说明，请参阅附带的“菜单操作”手册。

后面　C

❼ VIDEO OUT（复合视频信号输出）连接器（BNC 型）

❽ I/O 接口

针号	信 号	说 明
1	REMOTE ＋	用于将来采用 RS-485 连接方式进行系统扩展
2	REMOTE －	用于将来采用 RS-485 连接方式进行系统扩展
3	ALARM OUT	当动态检知功能或人脸识别功能启动并激活时，输出 5 V 电压，通常状态为 0 V 电压。
4	COM	共用引脚号为 3、5 和 7。
5	EXTERNAL CTRL OUT	当选择了色彩模式时，此端子与 COM 之间输出为 H（+5 V）；当选择了黑白模式时，输出为 L（0V）。
6	COM	共用引脚号为 3、5 和 7。
7	EXTERNAL CTRL IN	此端子和 COM 之间使用 H（+5 V）时，彩色模式被选择；使用 L（0 V）时，黑白模式被选择。

❾ ⏚ 接地端子（螺丝型）
若在连接中有噪音，请将此端子接地。
❿ 防掉落钢绳安装螺丝孔
当将摄像机安装到天花板或墙上时，请使用附带的螺丝将防掉落钢绳固定到此孔中。

⓫ 直流 12 V/交流 24 V（50 Hz）（电源输入）端子（直流 12 V ±10% / 交流 24 V ±10%）（SSC-G923/G913）

⓬ 电源插座（交流 220-240 V，50 Hz）（SSC-G928/G918）

安装

警告
- 如果要将摄像机安装在天花板等高处，请将安装工作委托给有经验的承包商或安装人员。
- 如果要将摄像机安装在天花板上，必须确保天花板有足够的强度承受摄像机加上支架的重量（总共 20 Kg），然后再牢固安装摄像机。如果天花板强度不够，则摄像机可能掉落并造成严重的人员受伤。
- 为防止摄像机掉落，必须连接附带的钢绳。
- 如果将摄像机安装在天花板上，请定期检查，每年至少一次，以确保连接没有松动。如果条件允许，请更频繁定期检查。

合适的镜头　D

镜头必须是重量低于 1 kg 的 CS 接口型。接口面后方的突起部分必须小于 4 mm。

安装镜头　E

1 卸下镜头接口盖。
2 旋进镜头并拧紧，直至牢固。
3 将镜头插头插入 LENS 插座。
  安装手动光圈镜头时可省略步骤 3。
4 根据镜头类型，旋转焦距调节螺丝调节焦距。

小心
- 当摄像机上未安装镜头时，请始终将镜头安装盖放在摄像机上。
- **检查镜头卡座**
  每年至少检查 1 次镜头卡座以确保其未出现松动。如果条件允许，请更频繁定期检查。

自动光圈镜头插头的安装　F

使用自动光圈镜头时，请安装镜头插头（不提供）。
此安装只可由专业维修人员或系统安装人员来执行。本摄像机包装中未附带镜头插头。

1 切去镜头插头边缘的光圈控制电缆，以取下现有的镜头插头，然后如左图所示除去电缆外套。
2 将镜头电缆焊接到镜头插头的针脚上。

安装摄像机

注意
若将摄像机安装在天花板上，务请悬挂牢实，否则摄像机会落下造成伤害。
若用悬架、机架和联动旋转底座（盘／架）等装置将摄像机安装在天花板上，请进行以下操作：
- 使用三脚架螺丝并用起子拧紧它们。请向附近的 Sony 经销店订购三脚架螺丝（Sony 零部件号：3-174-693-02）。
- 请在平坦处安装三脚架连接器。

安装防掉落钢绳　G

如果将摄像机安装到天花板或较高的位置，则必须连接附带的防掉落钢绳，以防止摄像机掉落。
如图所示，将防掉落钢绳连接至摄像机背后的螺丝孔。

注
连接钢绳时请小心，切勿将电源端子或电缆与钢绳短路。
1 将钢绳固定到天花板上的接线盒内。
  请使用符合接线盒（不提供）螺丝孔的螺丝。
2 使用附带的螺丝将钢绳固定到摄像机背面的钢绳安装螺丝孔中。

小心
请使用附带的螺丝进行安装。否则，钢绳可能无法正确起作用。

连接摄像机　H

❶ 将视频电缆连接到视频输出接口。
❷ 将视频电缆连接到视频监视器等设备的视频输入接口。
❸ 使用电源线连接合适的电源。
SSC-G928/G918: 连接至交流 220 - 240 V (50 Hz) 电源
SSC-G923/G913: 连接至直流 12 V 或交流 24 V (50 Hz) 电源
❹ 75 Ω 同轴电缆

注
- 请务必只可将正确的电压输入到摄像机的电源端子。
- 请务必将电源线完全推入。

相位调节

若图像垂直滚动，则请用同步模式菜单中的 V PHASE 调节垂直相位。
有关操作菜单的说明，请参阅附带的“菜单操作”手册。

现象规格 CCD 图像感应器

图像中可能出现的以下现象是 CCD（电荷耦合器件）图像传感器所特有的。这些现象不是故障。

白斑

虽然 CCD 图像传感器是采用高精度技术生产的，但由于宇宙射线等的影响，其屏幕上可能会出现细小的白斑（极少数情况）。
这与 CCD 图像传感器的原理有关，出现的白斑并不是故障。
在以下情况中，比较容易出现白斑：
- 在高温环境下进行操作时
- 提高倍率（灵敏度）时
- 当使用慢快门时

垂直拖影

拍摄亮度极高的物体（如强聚光灯或闪光灯）时，屏幕上可能出现垂直尾线，图像也可能出现扭曲。

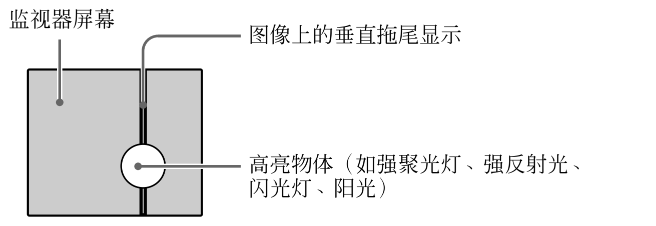

图形失真

拍摄微小的图案、条纹或线条时，它们可能呈锯齿状或出现闪烁现象。

规格

成像器件	1/3 英寸行间转移 CCD
有效像素	SSC-G923/G928: 976（水平）× 582（垂直） SSC-G913/G918: 752（水平）× 582（垂直）
镜头安装	CS 型接口
信号制式	PAL 彩色制式
同步系统	内部 / 线路锁定
水平分辨率	SSC-G923/G928：650 线（尖锐模式） SSC-G913/G918：540 线（尖锐模式）
最低照度	SSC-G923/G928: 彩色：0.22 lx 于 F1.2（50 IRE, AGC 打开, 加强模式） 0.11 lx 于 F1.2（30 IRE, AGC 打开, 加强模式） 黑白：0.06 Lx 于 F1.2（50 IRE, AGC 打开, 加强模式） 0.03 lx 于 F1.2（30 IRE, AGC 打开, 加强模式） SSC-G913/G918: 彩色：0.6 lx 于 F1.2（50 IRE, AGC 打开, 加强模式） 0.3 lx 于 F1.2（30 IRE, AGC 打开, 加强模式） 黑白：0.06 Lx 于 F1.2（50 IRE, AGC 打开, 加强模式） 0.03 lx 于 F1.2（30 IRE, AGC 打开, 加强模式）
视频输出	1 Vp-p，75 Ω，负同步
视频 S/N	50 dB（AGC 关闭, WEIGHT 打开）
动态范围	75 dB 典型
电子快门	1/50, 1/120, 1/250, 1/500, 1/1000, 1/2000, 1/4000, 1/10000, 1/20000, 1/40000, 1/80000, 1/100000（秒）
白平衡	ATW-PRO/ATW/3200K/5600K/MANUAL/DUAL WB
自动增益控制（AGC）	OFF/NORMAL/TURBO/MANUAL
电源要求	SSC-G923/G913：24 V 交流电源（50 Hz）/12 V 直流电源 SSC-G928/G918：220-240 V 交流电源（50 Hz）
功率消耗	SSC-G923: 2.8 W SSC-G928: 3.5 W SSC-G913: 2.4 W SSC-G918: 2.8 W
工作温度	−10°C 至+50°C
工作湿度	20 至 80%
储藏温度	−40°C 至+60°C
储藏湿度	20 至 95%
重量	SSC-G923/G913：约 400 g SSC-G928/G918：约 420 g
体积	63 × 57 × 124 mm（不包含突起）（宽／高／深）
附件	镜头接口盖（1） 电源线（1）（仅限于 SSC-G918/G928） 菜单操作（1） 使用手册（1） 防掉落钢绳（1） 螺丝 ⊕ M4 × 8（1）

设计和规格若有变更，恕不另行通知。

注意
在使用前请始终确认本机运行正常。
无论保修期内外或基于任何理由，SONY 对任何损坏概不负责。由于本机故障造成的现有损失或预期利润损失，不作（包括但不限于）退货或赔偿。

定期部件更换
视其使用寿命而定，本产品中的某些部件（如电解质电容）需要定期更换。部件的寿命因本产品的使用环境或条件以及使用的时间长度而异，因此我们建议您定期进行检查。
详情请咨询向您销售本产品的经销商。

制造商	索尼（中国）有限公司
地址	北京市朝阳区东三环北路霞光里 18 号佳程大厦 A 座 25 层
产地	广东省东莞市
企业标准编号	Q/CYSNC008
出版日期	2009 年 7 月

产品中有毒有害物质或元素的名称及含量

使用环境条件：参考使用手册中的工作条件

部件名称	有毒有害物质或元素					
	铅 (Pb)	汞 (Hg)	镉 (Cd)	六价铬 (Cr (VI))	多溴联苯 (PBB)	多溴二苯醚 (PBDE)
实装基板	×	○	○	○	○	○
外壳	×	○	○	○	○	○
光学组件	×	○	○	○	○	○
附属品	×	○	○	○	○	○

○：表示该有毒有害物质在该部件所有均质材料中的含量均在 SJ/T11363-2006 标准规定的限量要求以下。
×：表示该有毒有害物质至少在该部件的某一均质材料中的含量超出 SJ/T11363-2006 标准规定的限量要求。